THE DATA CONTAINED HEREIN CONSTITUTES PROPRIETARY INFORMATION OF WEST COAST MAGNETICS AND SHALL NOT BE USED, DUPLICATED, OR DISCLOSED IN WHOLE OR IN PART, EXCEPT FOR RIGHTS EXPRESSLY GRANTED BY CONTRACT, WITHOUT THE PRIOR WRITTEN AUTHORIZATION OF WEST COAST MAGNETICS.

WCM REVISIONS			
REV	CHANGES	BY	DATE

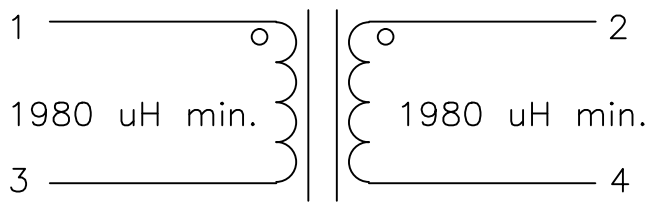

SCHEMATIC

ELECTRICAL SPECIFICATIONS:
Inductance = 1980 uH minimum at 10 kHz
Rated DC Current (amps) 40 deg. C Temp Rise: 0.8
Rated DC Current (amps) 25 deg. C Temp Rise: 0.6
Maximum Leakage Inductance = 42.5 uH
Maximum DCR = 347 mOhms
Interwinding Hipot = 1500 Vac

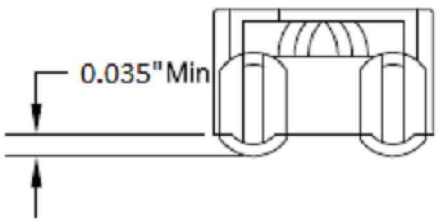

SIDE VIEW

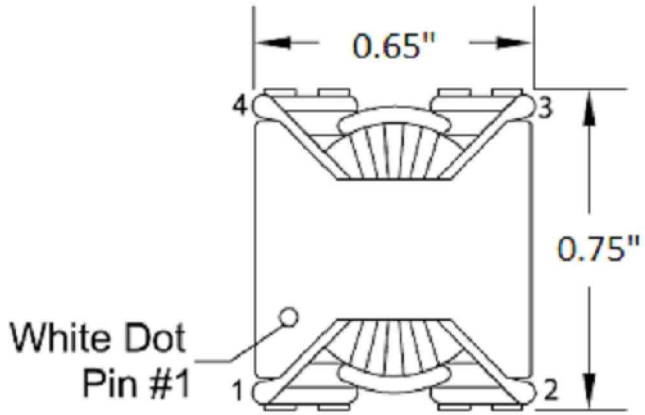

TOP VIEW

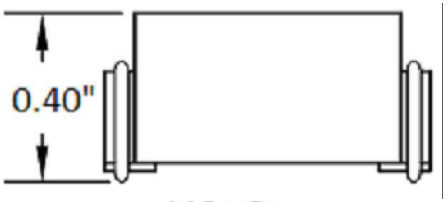

SIDE VIEW

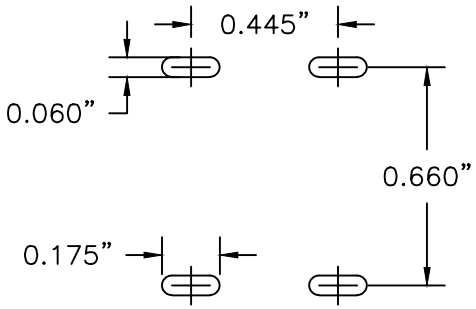

PCB LAYOUT

UNLESS OTHERWISE SPECIFIED DIMENSIONS ARE IN INCHES TOLERANCES PER ANSI Y14.5M

FRAC	DECIMALS	ANGLES	SURF.
±1/32	X. ± 0.10"	± 1 deg.	
	.X ± 0.05		
	.XX ± 0.02"		
	.XXX ± 0.005"		

DRAWING NOT TO SCALE UNLESS NOTED.

WEST COAST MAGNETICS
4848 FRONTIER WAY, STE. 100
STOCKTON, CA 95215
WWW.WCMAGNETICS.COM
800-628-1123

CUSTOMER	DESCRIPTION	
WCM	COMMON MODE CHOKE SM	
PART NUMBER		REV.
WCMCMC0062		–
RELEASED BY	DATE	PAGE
CC	11/07/13	1/1